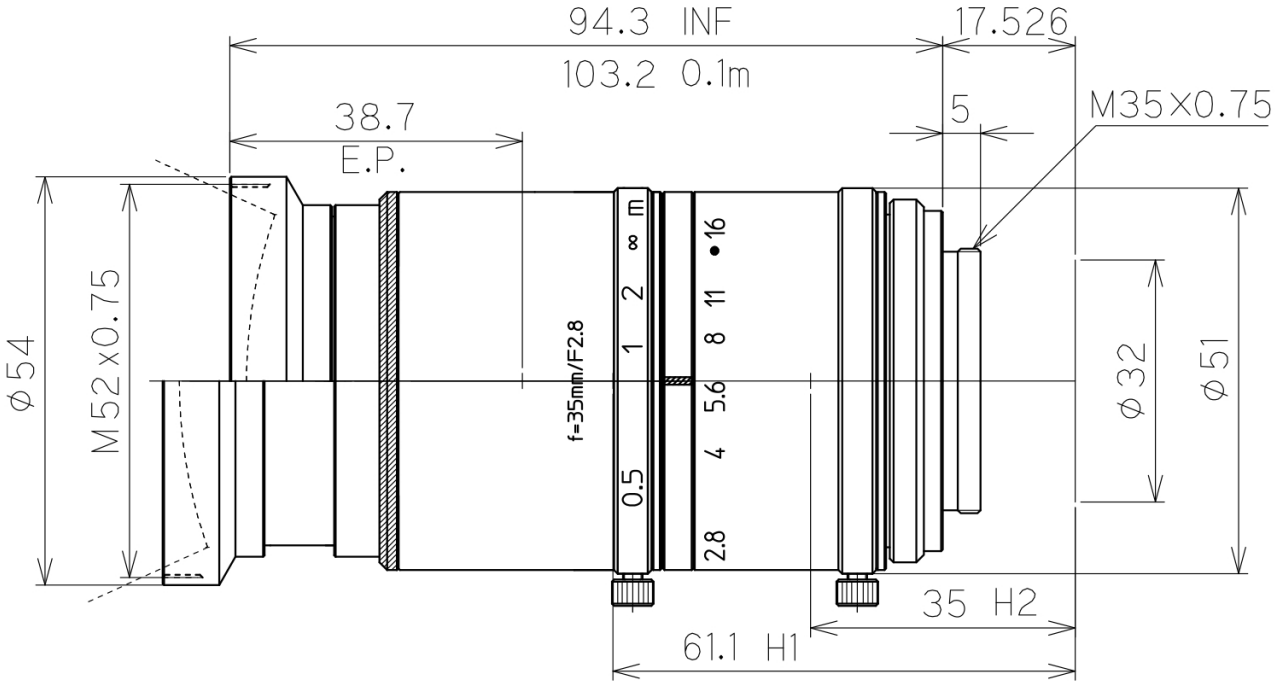

2" 2.8/35mm		2"	APS-C	4/3"
FOCAL LENGTH		f=35mm		
F-NUMBER		F=2.8-16		
PICTURE SIZE		25.6×19.6mm	22.3×16.7mm	18.4×13.8mm
ANGLE OF VIEW (∞)	VER. ANGLE	30.7°	26.9°	22.3°
	HOR. ANGLE	40.2°	35.4°	29.5°
	DIA. ANGLE	49.1°	43.4°	36.4°
DISTORTION (TV)		0.12%	0.05%	-0.00%
FIELD OF VIEW (MINIMUM FOCUS DISTANCE)	VER.	57mm	50mm	41mm
	HOR.	76mm	67mm	55mm
	DIA.	96mm	83mm	69mm
MINIMUM FOCUS DISTANCE		0.1m		
FLANGE BACK		17.526mm in air		
BACK FOCUS		19.5mm in air		
FILTER SCREW SIZE		M52×0.75		
FRONT/REAR EFFECTIVE DIA.		FRONT φ44.0mm	REAR φ26.6mm	
MOUNT		M35×0.75		
EXIT PUPIL		-53.4mm		
TEMPERATURE RANGE		-10~+50°C		
STORAGE TEMPERATURE RANGE		-20~+60°C		
RESOLUTION CENTER/CORNER		CENTER 160lp/mm	CORNER 100lp/mm	
WEIGHT		375g		

NOTE:Specifications and availability are subject to change without notice

注）本仕様については、予告なしに変更する場合があります。

		尺度 1/1	工場番号 LM35VM35
		機種名 2" F2.8 / f=35mm	
2020.12.8	作成年月日	機種番 LM35VM35	S10-682