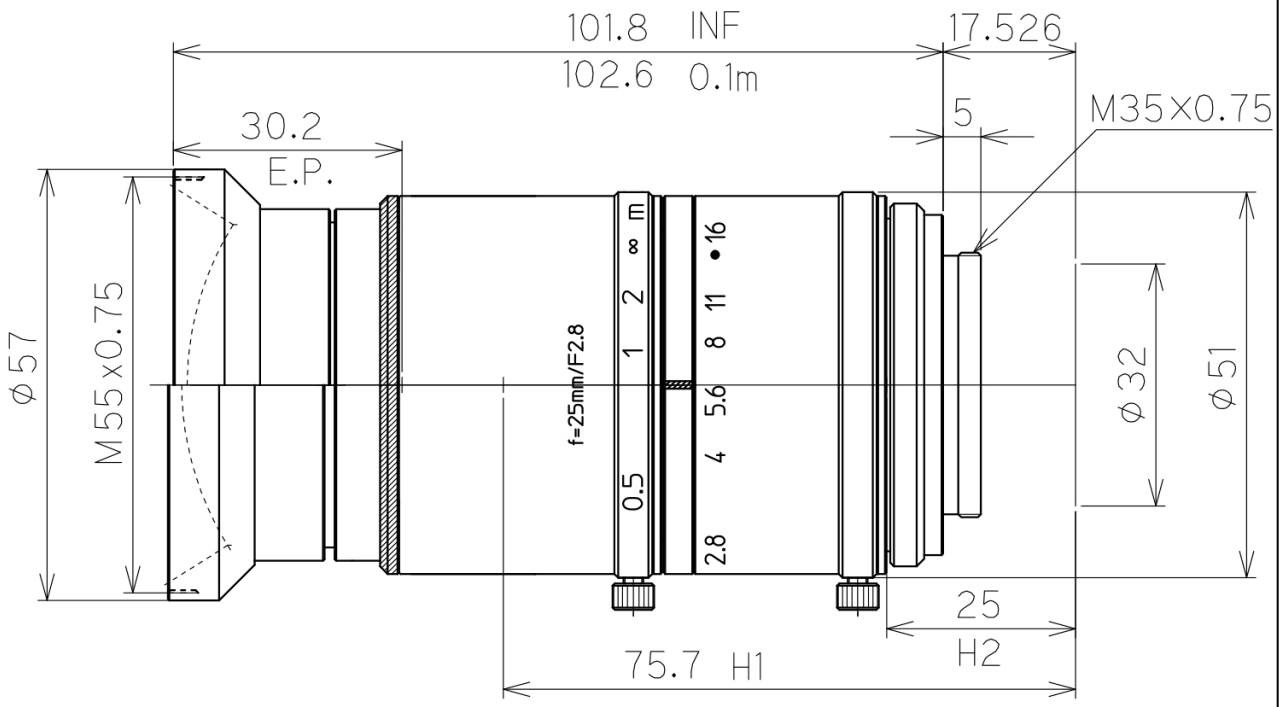

2" 2.8/25mm		2"	APS-C	4/3"
FOCAL LENGTH		f=25mm		
F-NUMBER		F=2.8-16		
PICTURE SIZE		25.6x19.6mm	22.3x16.7mm	18.4x13.8mm
ANGLE OF VIEW (∞)	VER. ANGLE	42.0°	37.0°	30.9°
	HOR. ANGLE	54.0°	48.0°	40.4°
	DIA. ANGLE	64.6°	57.9°	49.3°
DISTORTION (TV)		0.59%	0.34%	0.15%
FIELD OF VIEW (MINIMUM FOCUS DISTANCE)	VER.	93mm	81mm	67mm
	HOR.	125mm	109mm	89mm
	DIA.	157mm	136mm	112mm
MINIMUM FOCUS DISTANCE		0.1m		
FLANGE BACK		17.526mm in air		
BACK FOCUS		20.3mm in air		
FILTER SCREW SIZE		M55x0.75		
FRONT/REAR EFFECTIVE DIA.		FRONT φ42.4mm REAR φ24.6mm		
MOUNT		M35x0.75		
EXIT PUPIL		-54.1mm		
TEMPERATURE RANGE		-10~+50°C		
STORAGE TEMPERATURE RANGE		-20~+60°C		
RESOLUTION CENTER/CORNER		CENTER 160lp/mm CORNER 100lp/mm		
WEIGHT		400g		

NOTE:Specifications and availability are subject to change without notice

注）本仕様については、予告なしに変更する場合があります。

		尺度 1/1	工場番号 LM25VM35
		機種名 2" F2.8 / f=25mm	
2020.12.8	作成年月日	機種番 LM25VM35	S10-681