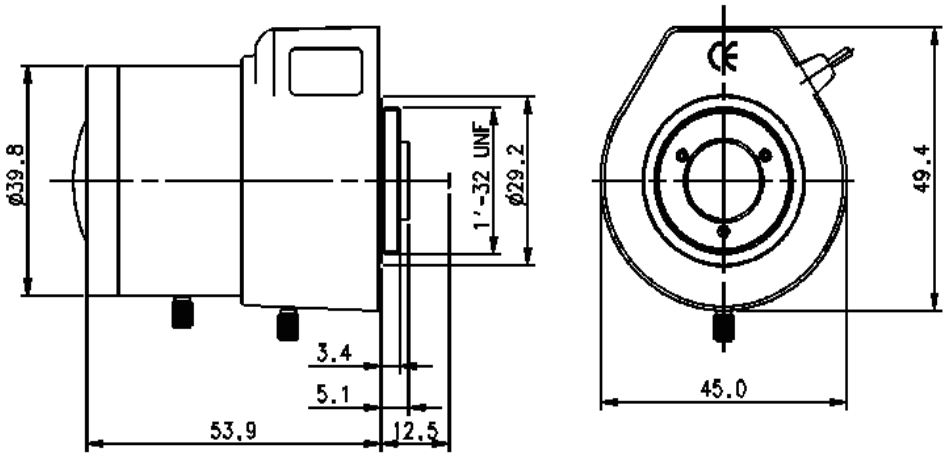

Unit : mm

SPECIFICATION		AUTO IRIS		
1. USE		FOR 1/3" B/W COLOR DAY & NIGHT CAMERA		
2. FOCAL LENGTH		2.8-12mm		
3. ZOOM RATIO		4.3x		
4. MAX. DIA. RATIO		F1.4		
5. IRIS RANGE		F1.4-360		
6. IMAGE SIZE		φ6		
7. BACK FOCAL LENGTH		W 7.7mm	T 17.9mm	in air
8. FLANGE FOCAL LENGTH		12.5mm		in air
9. FOCUS RANGE		0.25m		
10. FIELD ANGLE	DIA.	W 121.7°	T	30.0°
	HOR. HOR.	97.6°		24.1°
	VER.	72.6°		18.8°
11. FIELD OF VIER AT M.O.D.				
	HOR.	W 896mm	T	106mm
	VER.	368mm		80mm
12. CLEAR APERTURE	FRONT	φ26.6mm		
13. CLEAR APERTURE	REAR	φ7.7mm		
14. EXIT PUPIL POSITION		W ---	T ---	
15. MOUNT		CS-MOUNT		
16. FILTER SCREW SIZE		----		
17. DISTORTION (TV)		W ---	T ---	
18. WEIGHT		113.5g		

DC (DIRECT CONTROL)

DRIVE COIL	RESISTOR	190Ω	(25° C)
	COLOR	YELLOW(+)	ORANGE(−)
BRAKE COIL	RESISTOR	700 Ω	(25° C)
	COLOR	RED (+)	BROWN (−)
DRIVE VOLT.	OPEN	LESS THAN	4.5V
	CLOSE	OVER THAN	0.5V

		1/3" F1.4 / 2.8-12mm		
		LMVZ282A-IR		