computar

VL7531U-MPZ

f=75mm F3.1
for 1 Type 20Megapixel cameras, Motorized Control Fixed-focal
USB interface, C-Mount

Optical Specifications

Model No.		VL7531U-MPZ		Effective Lens Aperture		Front:ϕ23.6mm Rear:ϕ16.5mm	
Focal Length		75mm		Back Focal Length		12.0mm (in Air)	
Operation Range	Iris	F3.1 - F16.0		Flange Back Length		17.526mm (In Air)	
	Focus	0.25m - Inf.		Max. Image Format		12.8mm x 9.6mm(ϕ16mm)	
Object Dimension at M.O.D.	1 Type	38.9mm x 29.2mm		Distortion	1 Type	0.0%	
	2/3 Type	26.8mm x 20.1mm			2/3 Type	0.0%	
	1/1.8 Type	21.9mm x 16.4mm			1/1.8 Type	0.0%	
Angle of View	D	1 Type	12.2°	2/3 Type	8.4°	1/1.8 Type	6.9°
	H		9.8°		6.7°		5.5°
	V		7.3°		5.0°		4.1°

Mechanical & Electrical Specifications

Control Interface		USB2.0	Dimensions	As per the attached drawing
Power mode		Bus powerd (500mA)	Mount	C-Mount
Connector		USB TypeA	Weight	415g
Operating Temperature		-10℃ - +50℃	Tripod Screw	-
Control	Iris	Motorized	Filter thread	M43 x P0.75mm
	Focus	Motorized		

Dimensions

Unit:mm

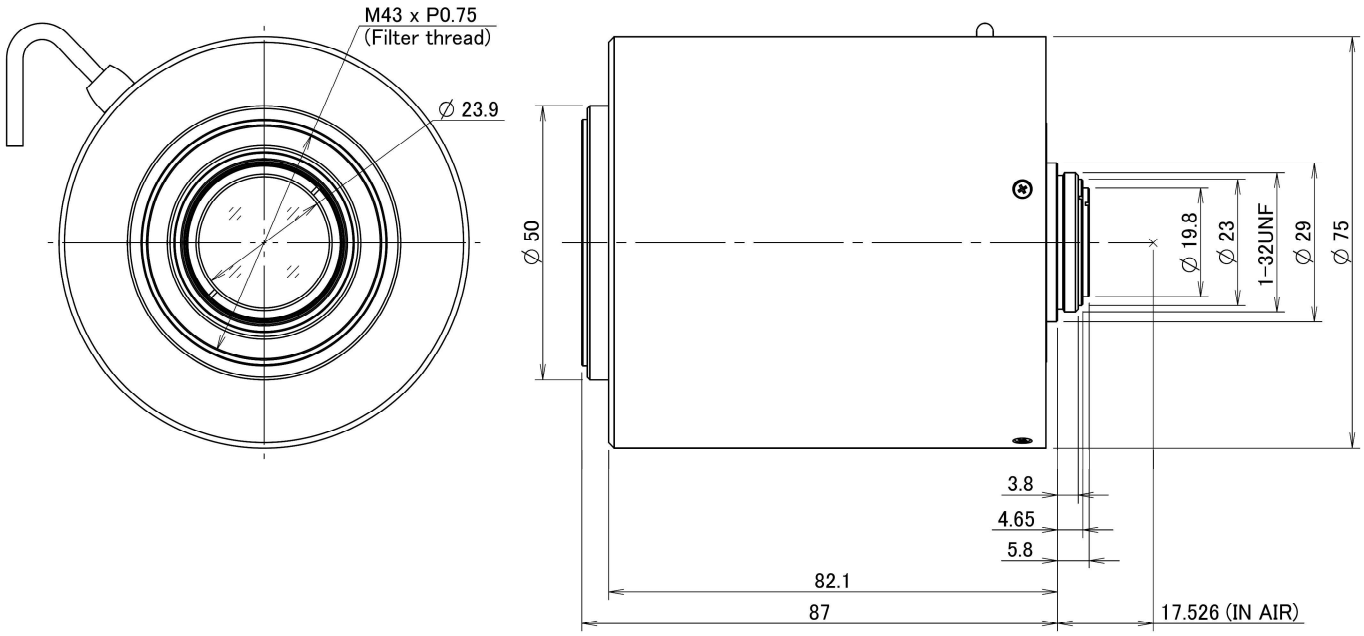

Length of Wire

300±20 (mm)

This specification is subject to change without any notice. 2022.11