computar

MLM-3XMP

0.3X- 1.0X
for 2/3type Cameras, Megapixel Macro Zoom
C-Mount

Model No.		MLM-3XMP		Effective Lens Aperture	Front	φ15.5mm
Max.Magnification		0.3X - 1.0X			Rear	φ7.0mm
Max.Aperture Ratio		1:4.5		Back Focal Length		20.4mm
Max.Image Format		8.8mm x 6.6mm(φ11mm)		Distortion	2/3type	0.3X Tele +0.02% (y=5.5)
Operation Range	Iris	F4.5 - F22C				1.0X Wide +1.78% (y=5.5)
	Focus	90mm			1/2type	0.3X Tele +0.12% (y=4.0)
Control	Iris	Manual				1.0X Wide +0.77% (y=4.0)
	Focus	Manual		Flange Back Length		17.526mm
	Zoom	Manual		Mount		C-Mount
				Filter Size		M34 P=0.5mm
				Dimensions		φ36.5mm x 79.5mm
				Weight		150g
Object Dimension at 90mm	D	2/3type	36.7mm – 11.0mm	1/2type	26.7mm – 8.0mm	
	H		29.3mm – 8.8mm		21.3mm – 6.4mm	
	V		22.0mm – 6.6mm		16.0mm – 4.8mm	
Angle of View	D	2/3type	14.88° - 2.84°	1/2type	10.70° - 2.72°	
	H		11.80° - 2.78°		8.48° - 2.18°	
	V		8.74° - 2.24°		6.38° - 1.64°	
Operating Temperature		-10℃ - +50℃				

For CS-Mount camera,Please use 5mm adapter ring.

Dimensions

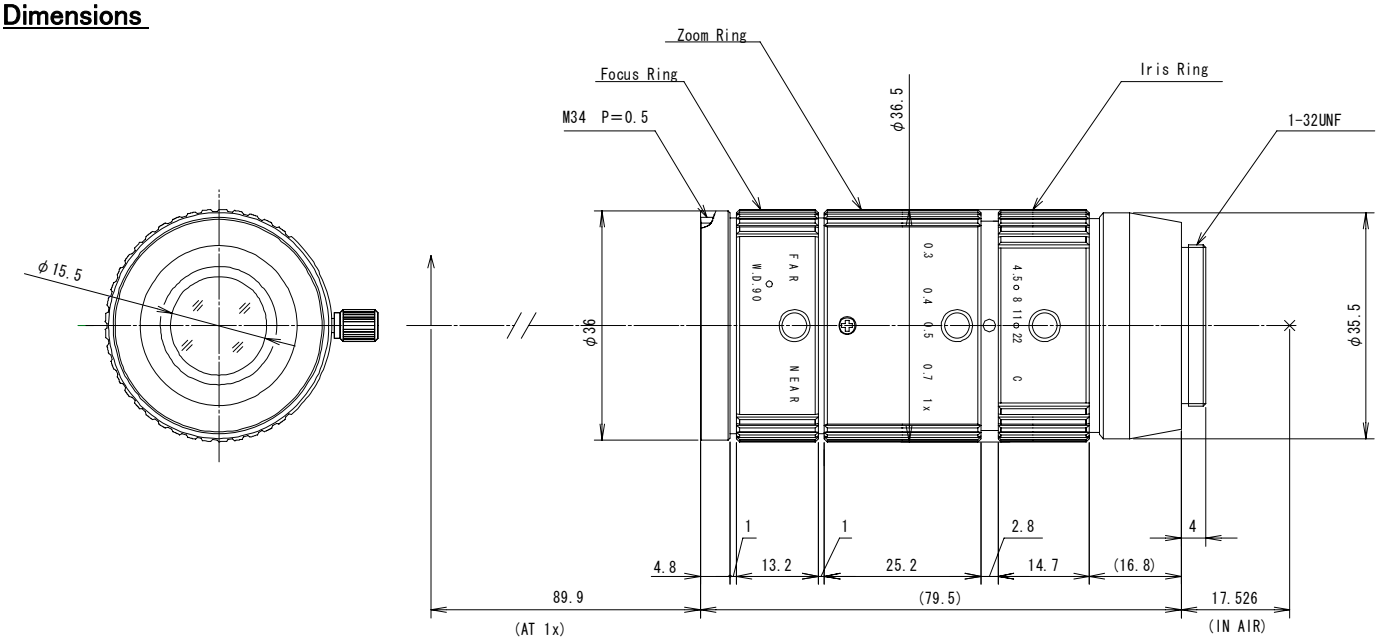

Specifications subjected to change without any notice.

2009.09