computar

DL0828UC-MPY

f=8mm F2.8
for 1/1.1 Type 12Megapixel cameras, Motorized Control Fixed-focal
USB interface, C-Mount

Optical Specifications

Model No.		DL0828UC-MPY		Effective Lens Aperture		Front:ϕ31.2mm Rear:ϕ12.9mm	
Focal Length		8mm		Back Focal Length		13.0mm (In Air)	
Operation Range	Iris	F2.8 - F16.0		Flange Back Length		17.526mm (In Air)	
	Focus	0.1m - Inf.		Max. Image Circle		ϕ14.4mm	
Object Dimension at M.O.D.	1/1.1 Type	155.6mm x 113.0mm		Distortion	1/1.1 Type	0.0%	
	2/3 Type	121.2mm x 90.2mm			2/3 Type	-1.6%	
	1/1.8 Type	98.6mm x 73.5mm			1/1.8 Type	-1.7%	
Angle of View	D	1/1.1 Type	80.4°	2/3 Type	68.3°	1/1.8 Type	58.1°
	H	11.22mm x 8.22mm	69.4°	8.8mm x 6.6mm	57.0°	7.2mm x 5.4mm	47.8°
	V	(ϕ13.9mm)	53.8°	(ϕ11.0mm)	44.1°	(ϕ9.0mm)	36.6°

Mechanical & Electrical Specifications

Control Interface		USB2.0	Dimensions	As per the attached drawing
Power mode		Bus powerd (500mA)	Mount	C-Mount
Connector		USB TypeA	Weight	178g
Operating Temperature		-20℃ - +60℃	Tripod Screw	-
Control	Iris	Motorized	Filter thread	M52 x P0.75mm
	Focus	Motorized	IRCF switcher	-

Dimensions

Unit:mm

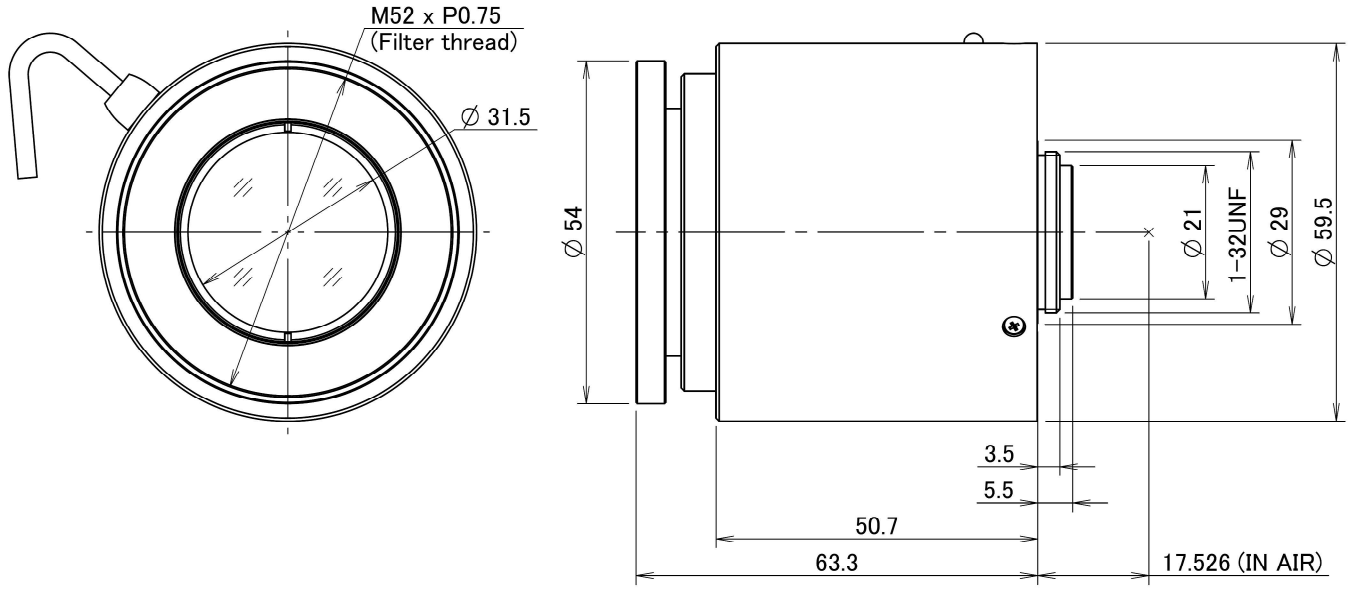

Length of Wire

300±20 (mm)

This specification is subject to change without any notice.

2022.11